Check for updates

Received: 31 January 2024 | Revised: 27 June 2024 | Accepted: 1 July 2024

DOI: 10.1049/wss2.12085

IET Wireless Sensor Systems

The Institution of Engineering and Technology WILEY

ORIGINAL RESEARCH

SmartCardio: Advancing cardiac risk prediction through Internet of Things and edge cloud intelligence

S. Durga[1] | Esther Daniel[2] | J. Andrew[3] | Radhakrishna Bhat[3]

[1]TIFAC CORE in Cyber Security, Amrita School of Engineering, Amrita Vishwa Vidyapeetham, Coimbatore, India

[2]Department of Computer Science and Engineering, Karunya Institute of Technology and Sciences, Coimbatore, India

[3]Department of Computer Science and Engineering, Manipal Institute of Technology, Manipal Academy of Higher Education, Manipal, Karnataka, India

Correspondence

J. Andrew.
Email: andrew.j@manipal.edu

Abstract

Cardiovascular disease is a leading cause of illness and death globally. The integration of Internet of Things (IoT) and deep learning technologies, including transfer learning, has transformed healthcare by improving the prediction and monitoring of conditions such as arrhythmias, which can be fatal if not detected and treated promptly. Traditional methods often lack real-time accuracy due to scattered data sources. A novel heart care approach utilising IoT technology and edge cloud computing is introduced to provide rapid, automated responses and support decision-making. The system connects smart devices, sensors, and healthcare providers to predict patient conditions and deliver accessible healthcare services. It consists of two main phases: data acquisition, where sensors measure heart rate, temperature, and blood pressure, and data processing, where the edge cloud processes the data using Haar Wavelet transform, Convolutional Neural Network (CNN), and transfer learning. Experimental results demonstrate that this smart cardio system achieves 99.3% accuracy with reduced network delay and response time, outperforming traditional methods, such as k-nearest neighbours, support vector machine, and discrete wavelet-based convolutional neural network.

KEYWORDS

cloud computing, internet of things, learning (artificial intelligence)

1 | INTRODUCTION

Coronary heart disease is the most common cardiovascular disease and it includes common symptoms viz. (1) Angina, (2) Arrhythmia, and (3) Cardiac arrest. Angina occurs when the heart does not get enough blood as it needs. It causes pain in the chest. Arrhythmia is an abnormal increase in the heart rate [1]. Some may not be serious, but some may be life-threatening. Cardiac arrest occurs when blood circulation to the heart is reduced or suddenly stopped due to blockage. Discomfort in other areas of the upper body, such as neck, jaw, shoulder, arms, back, and chest, increase in pulse rate, nausea, light headedness are the warning signs of cardiovascular diseases. According to current statistics, heart disease is the leading cause of death, highlighting the importance of technology in reducing the risk of cardiac arrest.

The two most essential criteria considered for rescuing at-risk populations are early intervention and Preventive treatment. Due to recent breakthroughs in the Internet of Things (IoT) and cloud computing, electronic heart (e-heart) monitoring solutions are now available [2]. Integration of IoT in cardiac risk prediction offers real-time monitoring, remote patient care, early risk detection, personalised interventions, and data-driven decision-making. IoT devices continuously monitor vital signs, enable remote patient monitoring, detect risk factors early, provide personalised healthcare, and facilitate data-driven decision-making [3]. Challenges in current monitoring methods are addressed by the automated, continuous monitoring and real-time data analysis capabilities of IoT-driven solutions, improving patient outcomes and quality of life.

Despite IoT and cloud-based e-heart monitoring systems having the purpose of health monitoring, several primary challenges cannot be easily resolved by cloud-based design. Recent advancements in deep learning (DL) have demonstrated that a deep neural network, when trained on extensive

This is an open access article under the terms of the Creative Commons Attribution-NonCommercial License, which permits use, distribution and reproduction in any medium, provided the original work is properly cited and is not used for commercial purposes.

© 2024 The Author(s). *IET Wireless Sensor Systems* published by John Wiley & Sons Ltd on behalf of The Institution of Engineering and Technology.

datasets, outperforms a heart surgeon in accurately identifying cardiac arrhythmias. Recurrent Neural Networks (RNN), Long Short Term Memory Networks (LSTM), and Convolutional Neural Networks (CNN) have shown encouraging outcomes in the field of Electrocardiogram (ECG) analysis [4, 5]. CNNs can automatically extract intricate representative features from data, eliminating the need for manual feature extraction by humans. This feature enables the development of end-to-end learning systems that take ECG signals as input and predict the arrhythmia classes. The most popular cloud computing systems for machine learning include Amazon Web Services, Microsoft Azure, Google Cloud, and IBM Cloud. Large datasets can be easily consumed and managed to utilise cloud computing for DL, and DL models can scale rapidly and at lower costs using graphics processing unit (GPU) processing capability. However, the cloud-based paradigm of ECG data processing causes bandwidth consumption delays owing to the massive volume of health data being transmitted, and privacy concerns about the user's health data.

Edge computing reduces delay by processing critical data at the network's edge, enabling real-time responses without needing a central server [6, 7]. This approach leverages the processing power of IoT devices and edge servers. For a wearable heart attack detection system, three modules are essential: sensor, edge, and cloud. The sensor module, a wearable device, collects real-time ECG, oxygen, sweat, and movement data, sending it to a Raspberry Pi edge gateway for processing [8]. This IoT-assisted system intelligently predicts heart disease by monitoring heart status through interconnected sensors.

The rest of this paper is organised into the following sections. Section 2 reviews a few of the existing state-of-art techniques and Section 3 briefs the IoT CNN-based system model. Then, we provide the preliminaries and a detailed description of our proposed model. Section 4 presents the performance evaluation and experimental analysis of the model. Finally, Section 5 gives the conclusion and future work of this paper. Table 1 lists all abbreviations used in the paper.

TABLE 1 List of abbreviations used in the paper.

Abbreviation	Definition
RNN	Recurrent neural networks
LSTM	Long short term memory networks
CNN	Convolutional neural networks
IoT	Internet of things
AI	Artificial intelligence
ECG	Electrocardiogram
GPU	Graphics processing unit
SVM	Support vector machines
ANN	Artificial neural networks
MDCNN	Modified deep convolution neural network
GSO	Galactic swarm optimisation
CCNN	Cascaded convolution neural network
DL	Deep learning
ML	Machine learning
CWT	Continuous wavelet transform
DWT	Discrete wavelet transform
PCA	Principal component analysis
KNN	k-nearest neighbours

2 | RELATED WORK

Deep Learning, a subset of machine learning is inspired by the artificial neural networks (ANN) [9]. It leverages powerful computers and large datasets to train extensive neural networks, enhancing performance. Key to DL is automatic feature extraction, discovering representations at multiple levels [10]. Dynamic ensemble methods as classifiers and IoT integration enable accurate cardiac arrhythmia detection. DL mimics the brain's data processing for decision-making, learning from unstructured or unlabelled data. The rise of big data from sources, such as search engines, e-commerce, and social media has propelled DL, utilising cloud computing for data sharing and artificial intelligence (AI) adaptation [11].

DL algorithms have enhanced over the past few decades and developers around the world have donated to open source frameworks, such as TensorFlow, Theano, Keras, and Torch, all of which make it easy for people to build DL algorithms as if playing with LEGO pieces [12]. With the demand from gamers around the world, GPUs make it feasible for us to leverage DL algorithms to build and train models with magnificent results in a time-efficient manner [13]. A Principal Component Analysis (PCA) network has been used for extracting various features. A de-noising algorithm is employed to remove noise in the signals after they have been preprocessed [10, 14]. The signal's R-peak is computed using the Pan-Tompkins technique, and a fixed number of points are deleted. After that, the heartbeats are normalised using min-max. All heartbeats are divided into two groups: training and testing Using the PCA Net technique, features are extracted. Classification is done using support vector machine (SVM). The revolutionary growth in computing technology and the IoT paradigm have created various opportunities for healthcare needs [15]. Various challenges, such as security, scalability, and interoperability have to be addressed for a feasible IoT healthcare tool. Investigations of advanced computing technologies appropriate for cardiac healthcare are crucial.

A method that appropriately separates and recognises distinct types of arrhythmias has been proposed in ref. [16]. The arrhythmia patient can be continuously monitored utilising wearable sensors and a mobile app in this proposed method. This strategy improves the quality of care since it allows them to remain ambulatory while being monitored in their familiar surroundings. Machine learning algorithms classify data from electrocardiogram (ECG) sensors into several classes. The authors developed a monitoring method, visualising and

20436394, 2024, 6, Downloaded from https://ietresearch.onlinelibrary.wiley.com/doi/10.1049/wss2.12085, Wiley Online Library on [11/03/2026]. See the Terms and Conditions (https://onlinelibrary.wiley.com/terms-and-conditions) on Wiley Online Library for rules of use; OA articles are governed by the applicable Creative Commons License

classifying cardiac arrhythmias for hospitals to use to expand their patient care by utilising a mobile application. A combined approach based on Higher-Order Statistics and Naive Bayes to identify cardiac arrhythmias using ECG signals by Srinivasulu et al. provided better accuracy and faster detection [17]. The heartbeat classifications with reduced features outperform other conventional methods. However, there are further improvements such as ensemble classifiers, preprocessing and sampling methods to be incorporated to improve the system for overall better performance.

In ref. [18], the authors created a CNN-based model that was specifically designed for categorising ECG signals [19]. The classification of five kinds of ECG arrhythmic signals from Physionet's MIT-BIH Arrhythmia Dataset was used in this study. In the classification of ECG signals, the ANN has had a lot of success. The researchers demonstrated that the intended CNN model can correctly diagnose arrhythmia with a 95.2% overall accuracy. Multiple classification algorithms based on feature selection techniques were investigated to improve the performance of the cardiac monitoring system [20]. A successful combination of different classification algorithms as well as feature selection was also established based on the accuracy parameter [21]. The performance of feature selection approaches was evaluated using common machine learning techniques, such as naive Bayes, SVM, and decision tree in current research. In ref. [22], the authors employed a distributed processing strategy in which sensor data processing and decision-making activities were moved from the centralised cloud to the network's edge.

To detect heartbeats and diagnose arrhythmias, the authors utilised a supervised-learning approach. The strategy utilises a window-based feature definition that may be run on an asymmetric multicore CPU. In terms of attained accuracy in the detection of abnormal occurrences, the system's performance was compared to that of several existing systems. Moghadas et al. proposed a method for identifying arrhythmias and performing remote monitoring of patients' health that incorporates fog computing and data mining [18].

Islam and Rahaman developed a smart healthcare system that uses the IoT to track a patient's vital indicators in real-time [23]. Sensors are employed in this system to collect data from the healthcare setting. The designed scheme's mistake was significantly less according to the performance data. Patients' conditions are communicated to medical professionals via a gateway, where they may process and assess the patients' actual state. The model produced is considered suitable for patient monitoring, as evidenced by the system's performance.

The IoT healthcare systems collect data from sensors and predict heart-related diseases efficiently. An IoT architecture using Modified Deep Convolution Neural Network (MDCNN) [24] accurately evaluates heart-related diseases. The accuracy measures outperform the existing DL neural networks and logistic regression techniques. The wearable IoT is an inventive technology for remote health monitoring systems [25]. For smart health care support, the edge with hierarchical computing architecture provides an energy-efficient system. The system caters to the needs of diabetic patients with cardiovascular diseases. An intelligent framework with DL algorithms is proposed for better efficacy. Diagnosis of heart disease by integrating Edge, fog, and Cloud computing enables accurate prediction [26], The Galactic Swarm Optimisation (GSO) integrated with Cascaded CNN (CCNN) produces an optimised feature selection. This provides accurate predictions of abnormalities.

A model for a remote E-Health system based on a convolution neural network and residual network is proposed by Liu et. al [27]. The system employs convolution and residual networks for classifying both intra-patient and inter-patient data. Recent advancements in IoT and AI have significantly improved the prediction and management of cardiovascular diseases. Systems such as DEEP-CARDIO [28] use IoT biosensors and a bidirectional-gated recurrent unit attention model to provide accurate cardiac predictions and personalised recommendations. An internet of medical things platform with a deep CNN [29], achieving 99.42% accuracy by effectively using spatial information in medical imaging is an efficient model. An IoT-enabled ECG monitoring system utilises a hybrid classification model addressing class imbalance in datasets [30] and an IoT-based ECG devices preprocess signals and extract key features optimised by advanced algorithms, with a CNN, Bi-LSTM, and RNN framework ensuring robust heart disease detection [31, 32]with integration of cloud for efficient computation. These technologies highlight the transformative potential of IoT and AI in delivering precise, real-time cardiovascular healthcare solutions.

Table 2 compares the details of the existing works. Various healthcare system models related to cardiac diagnosis are studied. The conventional models possess a significant number of advantages such as accuracy, robustness, optimised feature selection, and swift detection. However, all methods discussed fall short of utilising the full range of edge cloud computing capabilities to provide a holistic solution that can be applied to a larger number of situations involving multiple parameters. Thus, it is crucial to develop a system that unleashes the potential of edge cloud capabilities to accurately and efficiently detect cardiac-related symptoms.

This paper introduces a cognitive heart care approach utilising IoT technology to provide rapid, automated responses and informed decision-making in healthcare. The system integrates smart devices, sensors, and healthcare professionals to predict patient states and offer accessible healthcare services [33]. The approach consists of two phases: data acquisition through sensor-based measurements of heart rate, temperature, and blood pressure sent to the edge cloud, and data processing where DL operations are performed for preprocessing and training. The model uses Haar Wavelet (HW) transform and CNN for preprocessing and training to predict heart disease risk. The architecture integrates live signals from monitoring devices with the Edge cloud, enabling real-time analysis without constant cloud connectivity. This allows for timely responses and scalability in computational demands. By processing data at the edge, the system enhances data privacy, security, and reliability, making it suitable for diverse healthcare settings.

20436394, 2024, 6, Downloaded from https://ietresearch.onlinelibrary.wiley.com/doi/10.1049/wss2.12085, Wiley Online Library on [11/03/2026]. See the Terms and Conditions (https://onlinelibrary.wiley.com/terms-and-conditions) on Wiley Online Library for rules of use; OA articles are governed by the applicable Creative Commons License

TABLE 2 Comparison of the related Works.

Authors	Processing model	Healthcare application	Classifiers	Pros	Cons
[10] Anand et al.	CNN-ECG signals	Automated healthcare monitoring	Resnet 50 CNN	Five categories of heartbeat analysed	Required to integrate latest technology for the current need.
[15] Farahani, B et al.	IoT-ECG signals	Secure wearable devices	Deep learning (DL) & CNN	Viable with edge-fog-cloud	Expertise and further investigations required to perform study
[16] Cañón–Clavijo et al.	ECG signals	Automated cardiac care mobile application	Machine learning classifiers	Static and mobile monitoring	IoT device data to be considered
[17] Srinivasulu. et al.	Higher order statistics (HoS) feature extraction techniques	Health care system	SVM, MLP, Bayesian, Optimal path forest	Increased accuracy and swift detection	Needed further evaluation of pre-processing techniques and ensemble methods for cost effective detection
[18] Khan, M. et al.	Static MIT-BIH arrhythmia database	Automated patient customised treatment	CNN	Early and effective detection of irregularities in heart rhythms	Accuracy to be improved
[22] Pati et al.	IoT-fog-cloud integrated framework	Automated health abnormalities detection	Embedded approach	High accuracy Conserves bandwidth	To include intelligent classifiers for processing new patients without relying on labels
[24] M. A. Khan et al.	IoT based wearable device	Heartbeat monitor	Modified deep CNN (MDCNN)	Achieves a high level of accuracy	Need optimisation techniques for improved overall performance
[25] S Abirami et al.	Wearable IoT with hierarchical computing architecture	Smart edge-based health care support system	Deep learning	Energy efficient Exerting expeditious diagnosis	Can be used for diabetic based cardiac detection
[26]Raju, K. B et al.	Smart healthcare model with edge-fog-IoT	Smart healthcare model with edge-fog-IoT	Optimised cascaded CNN Galactic swarm optimisation (GSO)	Optimised feature selection	The IoT assisted fog model has to be further examined for real-time diagnosis
[27]Liu, M et al.	Cognitive human-centric IoT edges	Remote E-health system	Deep neural networks	• High accuracy • Optimised performance of network model • Increased robustness	• Very limited datasets were analysed • Automatic and adaptive detection of diseases have to be incorporated.
[45]Ma, S et al.	Morphological and dynamic features	Heartbeat monitoring	Neural networks	High accuracy	Lack of IoT-based wearable sensors.
[19] Ranjani R.S et al.	IoT based mobile health system	Symptoms predictions via sensors/ smartphone	Machine learning classifiers	Efficient and accurate anomaly detection	Need to be improved to process large datasets
[34] Zyout et al.	Static automatic diagnosis database	Conventional health monitor	2D-CNN	Highest averaged accuracy and lowest loss	Advanced computing technologies to be incorporated for improved overall performance
[29]Singh et al.	Cardiac prediction on the internet of medical things (IoMT) platform	Healthcaretool for health professionals	Deep convolutional neural network (DCNN)	Precise and accurate diagnosis	Scalability have to be improved
[30] Ketu et al.	IoT-enabled ECG monitoring system	Accurate real-time cardiac health monitoring	Intelligent hybrid classification model	Handles the complexities of class imbalance ECG data. Intelligent and accurate prediction	High computation complexity

(Continues)

20436394, 2024, 6, Downloaded from https://ietresearch.onlinelibrary.wiley.com/doi/10.1049/wss2.12085, Wiley Online Library on [11/03/2026]. See the Terms and Conditions (https://onlinelibrary.wiley.com/terms-and-conditions) on Wiley Online Library for rules of use; OA articles are governed by the applicable Creative Commons License

TABLE 2 (Continued)

Authors	Processing model	Healthcare application	Classifiers	Pros	Cons
[31] Mishra et al.	Wearable IoT based ECG devices	Predicting heart ailment using ECG	CNN + BiLSTM + RNN three-layer deep learning framework	AS-DMO optimiser for feature selection, 97% accuracy.	Live data to be processed
[28] Yashudas et al.	Recommendation system for cardiovascular disease (CVD) prediction using IoT network	DEEP-CARDIO system	Bidirectional-gated recurrent unit (BiGRU) attention model	Provides physical and dietary recommendations	Computationally intensive
[32] Basavaraddi et al.	Cloud-based neural networks real-time patient ECG data	Telemedicine system	Cloud-integrated neural network model	Improved diagnostics accuracy	IoT based sensors or wearable devices can be incorporated

3 | AN IoT AND CNN-BASED APPROACH

This section presents the proposed IoT-assisted intelligent heart disease prediction framework and discusses the deep neural network-based cardiac arrhythmia classification method. The system model comprises a layered architecture for heart disease risk prediction. The architecture is inspired by the fact that machine learning techniques can facilitate decision-making in IoT environments. Figure 1 shows an IoT and Edge cloud-assisted intelligent heart disease prediction framework. The framework includes a sequence of operations starting from data collection to end with cognitive decision-making. The proposed framework adopts a layered approach where each layer is assigned a particular task.

3.1 | Data acquisition layer

The data acquisition layer is the physical layer, which has sensors for detecting and collecting information about the heart condition of the subject. This layer is responsible for sensing health data and transmitting to the IoT gateway the information gathered. In the proposed framework, various types of health-related multimedia and ECG signals are obtained using smart IoT sensors. To provide more precision to the predicted data and increase the scope of the system, more sensors such as pulse rate sensor, temperature sensor, SP02 oxygen sensor, and blood pressure sensor are used [2]. The sensor module intends to serve as a heart rate-tracking wearable band. It includes sensors such as a heart rate sensor, an ECG rate sensor, a sweat sensor, a temperature sensor, and an accelerometer sensor for constant monitoring.

The ECG Sensor AD8232 records the electrical impulse of the heart. The atrial contraction of the heart is measured by the P waveform followed by the QRS waveform. QRS wave has a slight deflection Q followed by R a steep peak and deflected S wave. This is due to the ventricular depolarisation and contraction of the heart. The ECG has a concluding part, T wave that represents ventricular re-polarisation [34]. The captured ECG signal is prone to high noise due to movement and electrode placement. The AD8232 module collects and preprocesses the signal to remove noise. Through NODEMCU, the captured signal is transmitted to Raspberry Pi edge gateway for further processing. The pulse rate sensor has a LED and photodiode. When blood flows through our fingers, there are few variations in the pressure of the nerves in the fingers [35]. This can be sensed by passing light through the fingers and detecting the changes through the photodiode. The illumination variation is sensed when blood flows through the nerves of the fingers. This variation is measured and converted into heart rate.

It is understood that patients experiencing discomfort in the heart have abnormal sweat due to stress. This changes the electrical conductance of the skin. This can be detected using a Galvanic Skin Response (GSR) sensor. It has gloves, which can be connected to two fingers of the subject. When there is a change in stress or emotions, the electrical conductivity changes, which is then contributed to the algorithm to detect the occurrence of a heart attack. Tri axis Accelerometer (AC) sensor is used to detect the orientation of the subject to detect falls during the occurrence of an emergency. The sensor returns the orientation of the subject concerning the X, Y, and Z-axis. It is represented by AC_x, AC_y, AC_z. Using the three values, the total acceleration value is calculated using Equation (1).

$$AC_{total} = \sqrt{AC_x^2 + AC_y^2 + AC_z^2} \tag{1}$$

The AC sensor is activated and tested to understand the free-fall condition that occurs during an emergency. It is understood that AC_{total} is in the range of 25–45 whenever there is a fall.

3.2 | Transport layer

The transport layer consists of IoT gateways that capture, transform, filter, and preprocess a vast amount of unprocessed data into digital streams so that it becomes ready for analysis. The transmission layer comprises short-range as well as long-range smart communication devices. The transmitting layer moves the sensor data across networks such as WiFi, 3G, Bluetooth, RFID, and Long-range wireless data transfer (LoRa) from the data acquisition layer to the processing layer and vice

20436394, 2024, 6, Downloaded from https://ietresearch.onlinelibrary.wiley.com/doi/10.1049/wss2.12085, Wiley Online Library on [11/03/2026]. See the Terms and Conditions (https://onlinelibrary.wiley.com/terms-and-conditions) on Wiley Online Library for rules of use; OA articles are governed by the applicable Creative Commons License

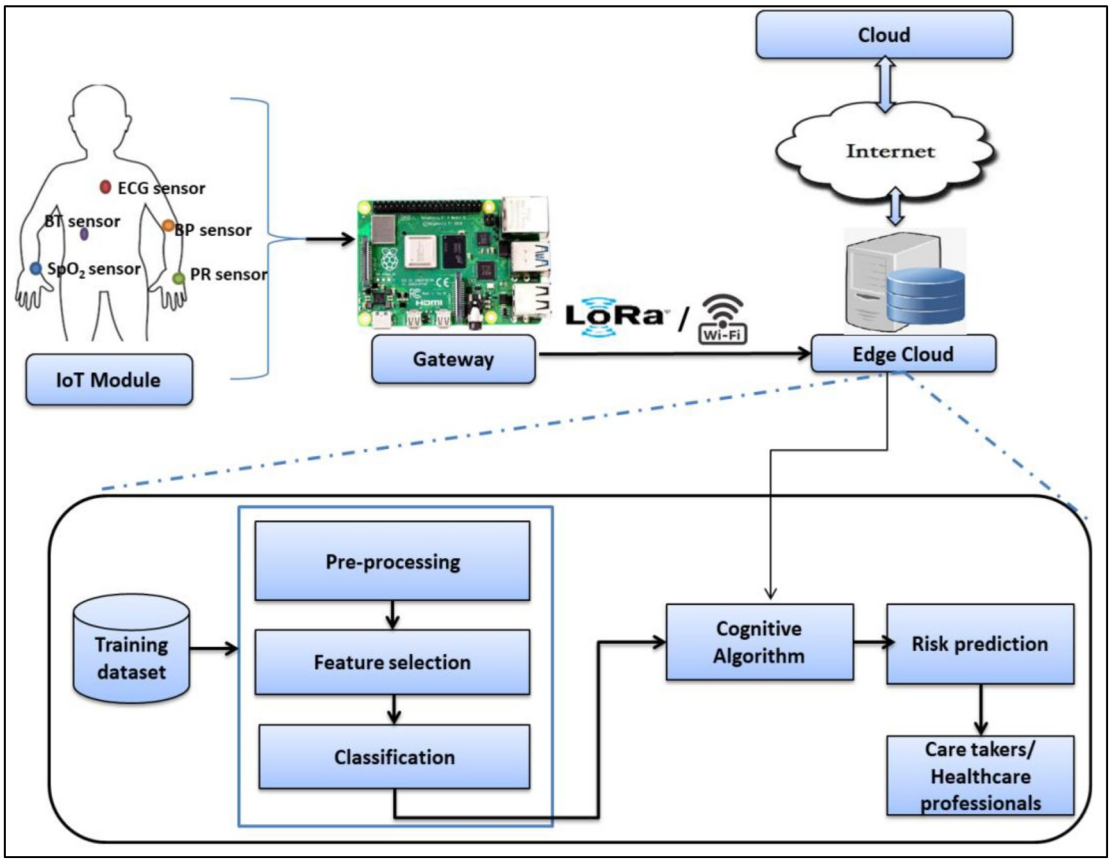

FIGURE 1 Internet of things and edge cloud assisted intelligent heart disease prediction framework.

versa. LoRa technology transmits signals using the 169 and 433 MHz radio frequency bands. The Low Power Wide Area Networking (LoRaWAN) protocol is commonly used in regional and global networks to connect battery-powered devices to the Internet. Wi-Fi sends large amounts of data quickly over a short distance, whereas LoRaWAN send fewer amounts of data hourly or daily across long distances. The sensors are connected to the controller board for the acquisition and further processing of signals. The acquitted signal has to be collected and accumulated.

3.3 | Data processing layer

The data processing layer consists of resource-rich servers close to the subject's vicinity. The processing layer is also known as the middleware layer. It stores, analyse, and process enormous quantities of information coming from the transport layer. It can handle and provide lower levels with a diverse range of services. It uses many tools, such as databases, cloud computing, and modules for the processing of health data. This layer is reflected by edge cloud devices responsible for further processing and enhanced data analysis. This layer is also where visualisation and machine learning technology can move in. The main goal of the data processing layer comprises of denoising of raw ECG signals, CNN-based training, and inference [17]. The proposed CNN-based model is trained at a centralised cloud server and then sent to an edge device for inference [23]. The Electrocardiogram signal is classified into four classes, Normal, Supraventricular Ectopic beat, Ventricular Ectopic beat, and Fusion beat. This paper employs CNN-based algorithm for classifying the arrhythmia data.

Feature extraction helps detect most heart conditions. The P, Q, R, S, and T waves constitute a heartbeat in an ECG signal. Amplitudes and frequencies of the ECG signal are determined by the feature extraction approach for further investigation. CNN extracts features from ECG and classifies the signal. As a result, no other approach is necessary to accomplish the feature extraction process in the classification method. CNN alludes to the idea that a neural network can learn features from data on its own, obviating the requirement for a separate feature extraction algorithm. This attribute was leveraged to generate an end-to-end algorithm that accepts ECG data as input and produces arrhythmia class predictions as output.

Validation testing on live data has been performed on the trained system, and the inference findings have been fed into the cognitive algorithm along with other associated variables such as blood pressure and pulse rate. The current status as well as associated data has been uploaded to the public cloud. The result triggers the response from healthcare professionals.

20436394, 2024, 6, Downloaded from https://ietresearch.onlinelibrary.wiley.com/doi/10.1049/wss2.12085, Wiley Online Library on [11/03/2026]. See the Terms and Conditions (https://onlinelibrary.wiley.com/terms-and-conditions) on Wiley Online Library for rules of use; OA articles are governed by the applicable Creative Commons License

3.3.1 | Edge processing module

The data collected is stored in the Raspberry Pi gateway for heart attack detection. Initially, the various normal and abnormal conditions of every vital sign are analysed. When the heart rate is greater than 100 beats per minute, then the condition is called tachycardia. Similarly, when the heart rate is less than 60 beats per minute, then the condition is said to be bradycardia and the range from 60–100 beats per minute is the normal heart rate condition. Table 3 displays various normal and abnormal heart conditions.

The oxygen level is measured with a pulse sensor, with the standard heart rate condition being 95% and above. If the oxygen saturation level falls below 90%, the patient is experiencing hypoxaemia and is at risk. Oxygen levels of 95% and above are denoted as OX_N (Oxygen Normal), while oxygen levels below 90% are denoted as OX_{AB} (Oxygen Abnormal). The GSR sensor data typically falls within the normal range of 0 to 20 S. If the measured value exceeds 20, it is considered an abnormality and is labelled as GSR_{AB}. The standard range is denoted as GSR_N. Similarly, when the individual experiences a rapid heart arrest and falls to the ground, as shown by Equation (1) in section 3.1, their AC_{total} value falls between the range of 25–45. The range falling inside this interval is denoted as normal by AC_N, while any anomalous state is denoted as abnormal by AC_{AB}. Various possible conditions are analysed and presented in Table 4.

3.3.2 | CNN-based training and inference system

Deep CNNs excel in classifying cardiac arrhythmias and detecting cardiac diseases using live IoT feeds. In the Data Acquisition layer, IoT sensors capture real-time ECG signals, heart rate, blood pressure, and other physiological data. The HW transform preprocesses this data, extracting key features and reducing noise. CNNs then automatically learn hierarchical representations from the raw data, identifying patterns and characteristics indicative of various cardiac conditions.

The data processing module's CNN architecture includes convolutional, pooling, and fully connected layers. Convolutional layers extract features by applying filters to input data, capturing spatial hierarchies. Pooling layers reduce feature map dimensions, improving efficiency and promoting translation invariance. Fully connected layers classify or detect conditions. Trained on labelled data, the CNN minimises a loss function via back propagation and gradient descent to classify cardiac conditions accurately. The model's performance, including accuracy, precision, recall, and F1-score, is assessed using validation and test datasets. Validation tunes hyper parameters and prevents overfitting, while testing evaluates generalisation.

Once the CNN model demonstrates satisfactory performance, it can be deployed in real-world scenarios to continuously analyse live IoT feeds for cardiac arrhythmia classification and disease detection. The model can provide timely alerts or notifications to healthcare professionals or patients, enabling early intervention and personalised healthcare management.

The dataset is taken from Kaggle [36] having one lakh records. The details of the dataset are given in Section 4. Data preprocessing is done using HW Transform. The wavelet transform will eliminate the low amplitude noise or the lousy signal from the wavelet domain. They will perform a correlation analysis which gives a maximal output when the input signal resembles the mother wavelet. The HW removes the white noise present in the ECG signal which is considered as the most difficult to remove due to the factors like:

1) Values are not correlated in time.
2) They have equal power at all frequencies.
3) They affect every single frequency component over the whole length of the signal.

The denoised signal is fed to the CNN, which classifies it into the proper class. Figure 2 shows the block diagram for the cardiac arrhythmia classification. The cloud-based CNN model with 11 layers includes convolutional layers for feature extraction, batch normalisation to reduce training epochs, and ReLu for node activation. Max-pooling identifies maximum values in feature map patches, while fully connected layers integrate features. The softmax layer provides output

TABLE 3 Heart rate conditions.

Heart rate range	Condition	Representation
Greater than 100 beats/min	Tachycardia	(Heart rate high) HR_H
Less than 60 beats/min	Bradycardia	(Heart rate low) HR_L
60–100 beats/min	Normal	(Heart rate normal) HR_N

TABLE 4 Occurrence of various conditions in the connected sensors.

Heart rate	Oxygen level	Skin response	Fall detection	Risk factor (R_f)
HR_H	OX_N	GSR_N	AC_N	2
HR_H	OX_{AB}	GSR_N	AC_N	3
HR_H	OX_{AB}	GSR_{AB}	AC_{AB}	3
HR_L	OX_{AB}	GSR_{AB}	AC_{AB}	4
HR_L	OX_{AB}	GSR_N	AC_N	4
HR_N	OX_N	GSR_N	AC_N	1

20436394, 2024, 6, Downloaded from https://ietresearch.onlinelibrary.wiley.com/doi/10.1049/wss2.12085, Wiley Online Library on [11/03/2026]. See the Terms and Conditions (https://onlinelibrary.wiley.com/terms-and-conditions) on Wiley Online Library for rules of use; OA articles are governed by the applicable Creative Commons License

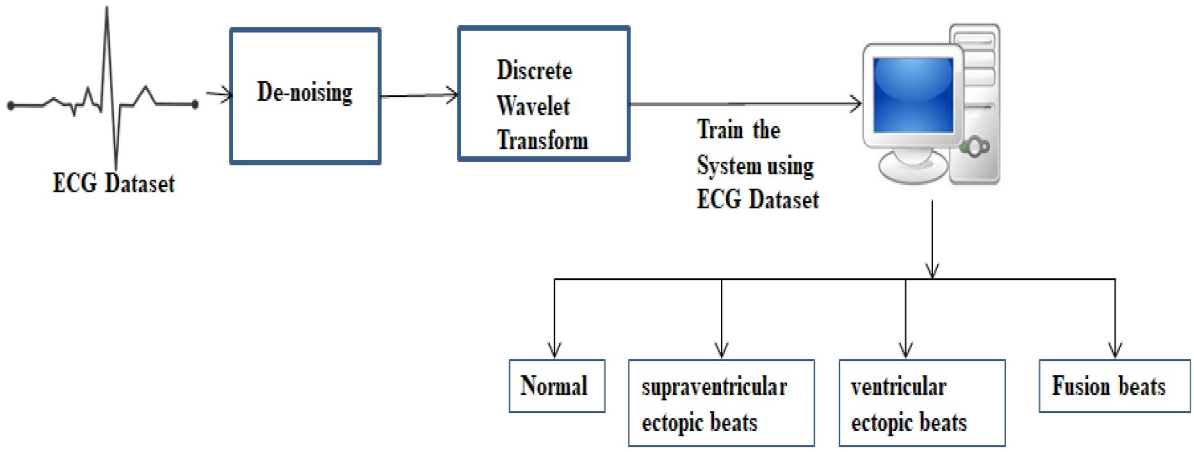

FIGURE 2 Block diagram for cardiac arrhythmia classification.

FIGURE 3 Data flow model used for de-noising [37].

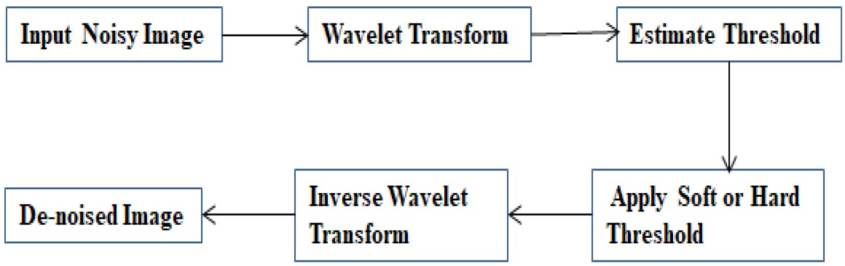

probabilities, and the classification layer determines cross-entropy loss for multiclass issues. This research employs wavelet denoising using the Haar function to remove noise while preserving signal features. Figure 3 illustrates the data flow of the de-noising model. Wavelets separate data into frequency elements, with the HW using rescaled 'square-shaped' functions.

The HW Transform excels at capturing abrupt data shifts, making it highly noise-resistant and improving the signal-to-noise ratio. It precisely locates features within a signal and is more computationally efficient than other wavelet transforms like CWT or DWT. The HW uses a mother wavelet function $\psi(t)$ and a scaling function $\phi(t)$ to generate approximation (cAj) and detail coefficients (cDj). For wavelet denoising, a mother wavelet is selected, and decomposition levels are determined. High- and low-pass filters create approximations (low-frequency) and details (high-frequency) by decomposing the signal and removing half the samples at each level. The power of the wavelet procedure is the possibility to gain good quality signal for the beat-to-beat examination and the possibility to have a high standard signal, while an averaging method is impossible, as it causes morphology distortion of the ECG signals.

3.3.3 | CNN-based training

AI is witnessing a massive growth in the bridging the space between the ability of humans and machines. Researchers and devotees work on countless aspects of the area to make stunning things happen. The agenda for this area is to empower machines to look out the world as humans do, discern it equivalently, and use the idea for a large number of tasks, such as image classification, Natural Language Processing, video recognition. The progress in the area of computer vision along with the concept of DL has been established and perfected with time, essentially over one distinct algorithm, that is, a Convolutional Neural Network.

A CNN or ConvNet is a DL algorithm that takes an input image, assigns weights and biases to various components in the image, and thus it differentiates one from the other [38]. The amount of preprocessing required for the ConvNet is much lesser when compared to various other classification algorithms. The CNN network can learn these properties. The architecture of CNN is equivalent to the connectivity design of neurons in the human brain [2]. The independent neurons react to various stimuli only in the confined regions of the visual field known as the Receptive Field. This collection of fields overlaps to envelope the entire visual area. The CNN model is shown in Figure 4. An input layer, a convolution layer, a rectified linear unit layer (ReLU layer), a pooling layer, a fully connected layer, a softmax layer, and a classification layer constitute the topology of a standard CNN.

The architecture of a deep CNN typically consists of several convolutional layers followed by pooling layers, and then fully connected layers at the end. The convolutional layers contain filters that convolve over the input image to extract

20436394, 2024, 6, Downloaded from https://ietresearch.onlinelibrary.wiley.com/doi/10.1049/wss2.12085, Wiley Online Library on [11/03/2026]. See the Terms and Conditions (https://onlinelibrary.wiley.com/terms-and-conditions) on Wiley Online Library for rules of use; OA articles are governed by the applicable Creative Commons License

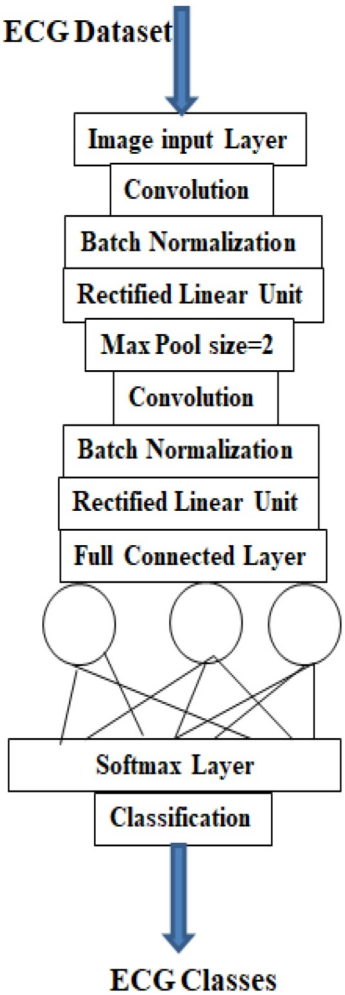

FIGURE 4 The convolutional neural network model employed in cloud.

features at different spatial scales. These features are then downsampled by the pooling layers to reduce the spatial dimensions of the feature maps and make the network more robust to variations in the input data. The rationale behind specific layer choices in a deep CNN architecture is based on the idea of learning progressively more complex representations of the input data. The convolutional layers are responsible for learning features such as edges, textures, and shapes in the image, while the pooling layers help to reduce the spatial dimensions of the feature maps and increase the network's ability to generalise to new data. The fully connected layers at the end of the network combine these learnt features to make predictions about the input data. By using multiple layers of different types, deep CNNs are able to learn hierarchical representations of the input data that capture both low-level and high-level features, making them well-suited for tasks such as image classification in the proposed work. The proposed work uses the transfer learning technique to change the pretrained CNN model. The process of changing and training fresh samples using previously taught models is known as transfer learning. [39, 40].

3.3.4 | CNN-based inference system and cognitive algorithm at the edge

The inference step involves using the pretrained CNN-based model to infer classes from each testing ECG data set and then assessing it using previously unseen data. All devices at the edge will have a local copy of the cloud-based centralised CNN learning application. The model would then begin learning and training itself based on the data provided by the user, allowing it to become smarter over time. This work offers a cognitive algorithm that predicts cardiac risk by combining ECG classification findings with current patient data, such as heart rate, temperature, and blood pressure. The data is processed on the edge cloud, which is capable of handling DL operations. We assume that the data collection occurs while the patients are mobile and within the edge server's range. The training results were transmitted to the cognitive algorithm, which cooperatively analysed all sensor data to decide. The cognitive algorithm is shown in Algorithm 1. The Flowchart of the proposed approach is shown in Figure 5.

Algorithm 1 Cognitive algorithm

```
Initialiszation: Pass the sensor data such
as HR, OX, GSR, AC, ECG to Edge node, Send
ECG to CNN-based inference system
Input: Result of CNN-based inference
system + HR, OX, GSR, AC
Table is inferred to classify patient
condition
if(classification = = N or SEB && R_f = = 1) then
  Declare No risk
elif(classification = = VEB or FB && R_f >= 1)
  At risk
elif(if(classification = = N or SEB && R_f > 1)
then
  At risk
Update the details with care takers.
```

4 | PERFORMANCE EVALUATION

The implementation of the proposed technique has two modules, namely, (1) Deployment of the trained model in the Public Cloud and (2) Inference at the edge and execution of the cognitive algorithm and are described as follows.

1. Deployment of the trained model at the Edge—It uses public cloud platforms to host the training process and model database. We use DL hosted cloud service in this research because customers may not be professionals in DL model creation and practice. Instead, customers' training data is simply uploaded, and the model they want to employ is chosen. The DL service will take care of all details.
2. Sending sensor data to the edge and inference at the edge—The goal of the CNN inference phase is to obtain a correct

20436394, 2024, 6, Downloaded from https://ietresearch.onlinelibrary.wiley.com/doi/10.1049/wss2.12085, Wiley Online Library on [11/03/2026]. See the Terms and Conditions (https://onlinelibrary.wiley.com/terms-and-conditions) on Wiley Online Library for rules of use; OA articles are governed by the applicable Creative Commons License

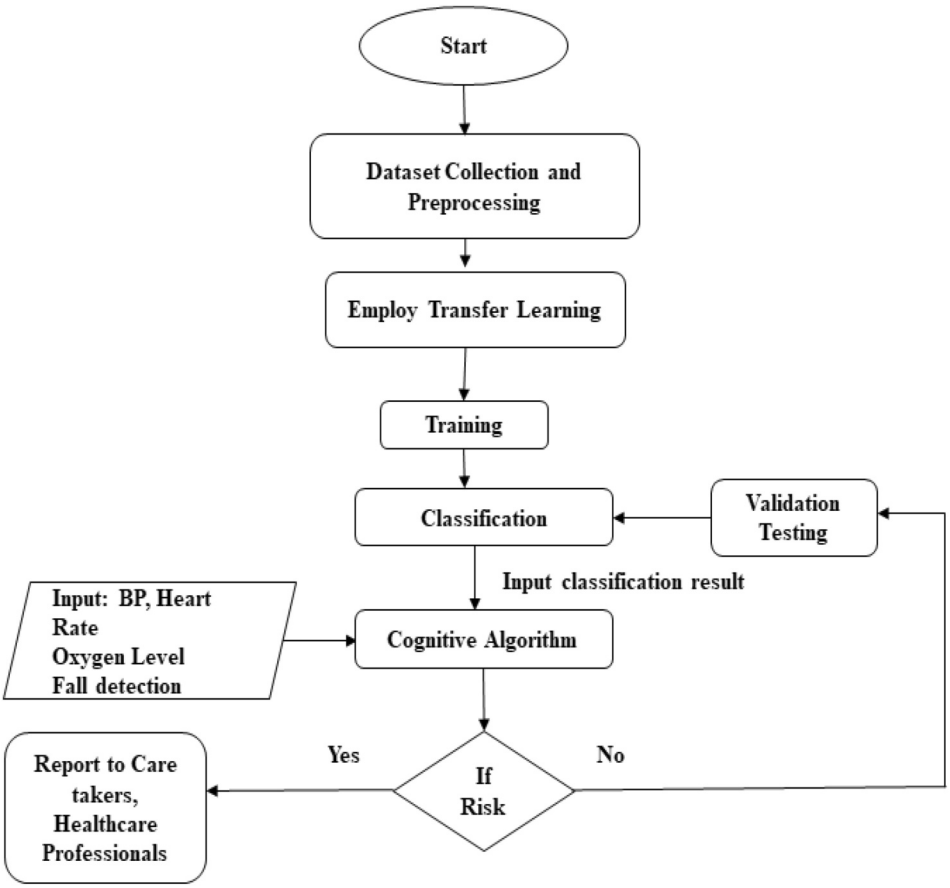

FIGURE 5 Overview of the proposed approach.

classification inference for the input images. The trained model is deployed on the edge, and the cognitive algorithm is implemented in this step. For GPU processing, the training phase was implemented using Amazon EC2 cloud instance g2.2xlarge. On Ubuntu Server 14.04 LTS, the CUDA SDK version 6.5 was installed. On the cloud instance, the Nvidia driver is set to install CUDA. The training model is implemented in Python 3. The proposed cognitive algorithm is implemented in Python 3 and performance measures including latency, reliability, and accuracy are examined. The study was carried out by altering the number of patients throughout time.

The experiment is carried out using the Kaggle arrhythmia dataset [36]. Datasets from the Kaggle MIT-BIH Arrhythmia Dataset have been used to conduct the experiments. The MIT-BIH Arrhythmia database is a widely used dataset containing annotated ECG recordings of various cardiac arrhythmias. These recordings encompass a range of cardiac conditions, including atrial fibrillation, ventricular tachycardia, and premature ventricular contractions. The annotations provided with each ECG recording have been reviewed to determine the specific arrhythmia or cardiac rhythm present in the data. Stratified random sampling was employed in this case to select the MIT-BIH dataset with HW transform that represents a balanced distribution of cardiac conditions. This method involves dividing the dataset into strata based on the different cardiac conditions, and then randomly sampling from each stratum in such a way that ensures a proportionate representation of each condition in the final sample. This ensures that each category of arrhythmia is adequately represented in the selected datasets, avoiding biases towards more common or prevalent conditions.

During 1975 and 1979, the BIH Arrhythmia Laboratory evaluated 47 participants and obtained 48 half-hour samples of continuous ECG recordings. The data was captured at 125 Hz and included cardiac conditions from five classes. At Boston's Beth Israel Hospital, ECG readings were taken from a mixed sample of 20 males and 27 women. 109,446 data included in the dataset. The five classes are: N stands for non ecotic (normal) beat, S for supraventricular ectopic beat, V for Ventricular ectopic beat, F for Fusion Beat, and Q for Unknown Beats. The training and testing datasets for the classifier were split as 60:40. For instance, there were 5899 pictures in the ST signal. 3539 and 2360 photos were used in the training and testing sets, respectively. The training and testing sets help to train and test the classification model. The transfer learning technique generates an output by randomly selecting 60 samples from a test dataset for each class: 60 N, 60 SVEB, 60 VEB, 60 F, and 60 Q category beats.

20436394, 2024, 6, Downloaded from https://ietresearch.onlinelibrary.wiley.com/doi/10.1049/wss2.12085, Wiley Online Library on [11/03/2026]. See the Terms and Conditions (https://onlinelibrary.wiley.com/terms-and-conditions) on Wiley Online Library for rules of use; OA articles are governed by the applicable Creative Commons License

There are 279 attributes in the database, with 206 having linear values and the rest having nominal values. There are a total of 452 examples that have been considered. Only the features essential to identify arrhythmia are chosen among the 279 attributes, and feature selection methods are used to discover the most important parameters.

In the first phase of the experiment, we used parameter tuning to find the best parameters for the cloud-based CNN model we had used. The results of manual tuning for the number of convolution layers utilised in the model by adjusting the number from 9 to 13 are shown in Figure 6. The extraction of more features will be aided by adding more layers. Adding layers, on the other hand, increases the network weight and thus model complexity. Instead of extracting traits, we tend to 'overfit' the data. The experimental findings show that the best performance is reached with 98.4%, 0.9705, and 0.9756 accuracy, precision, and F1-score for 11 convolution layers, respectively.

Utilising the Edge cloud and IoT infrastructure, the classification model can distribute computational tasks across multiple Edge devices and cloud servers. This allows for increased processing power and faster classification of arrhythmias, leading to scalability in handling a larger number of patients and data. Moving computation closer to the data source, such as the Edge devices in this case, can reduce latency and bandwidth usage. This enables real-time classification of arrhythmias directly at the source, leading to scalability in handling a large number of data streams from different devices. By designing the classification model in a modular and scalable manner, different components can be added or removed as needed. This flexibility allows for easy scalability of the model based on changing requirements and data volumes. CNNs are known for their efficient ability to learn and extract features from raw data. By combining CNN with HW transform, the model can effectively capture the temporal and spatial features of ECG signals, leading to improved classification accuracy and scalability in handling diverse types of arrhythmias. The Edge cloud and IoT-based cardiac arrhythmia classification framework that utilises CNN with HW transform can provide scalability by leveraging distributed computing, Edge and cloud resources, modular design, and advanced feature extraction techniques. This ensures efficient processing of data, accurate classification of arrhythmias, and adaptability to changing requirements and data volumes.

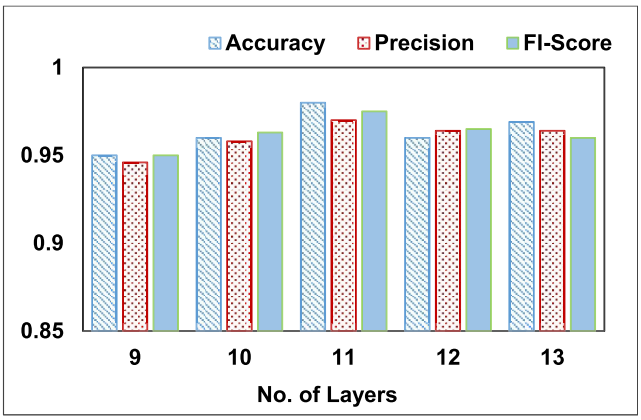

FIGURE 6 Performance variation of the cloud-hosted convolutional neural network model.

The performance metrics considered to evaluate the proposed approach are described as follows.

4.1 | Precision (P)

Precision is defined as the ratio of accurately estimated positive cases of arrhythmia as shown in Equation (2).

$$P = T_p / T_p + F_p \tag{2}$$

4.2 | Recall (R)

The recall in Equation (3) is the proportion of correctly recognised positive cases.

$$R = T_p / T_p + F_n \tag{3}$$

4.3 | FI Score (FI)

The harmonic average of precision and recall produces the FI score.

Equation (4) shows the formula of FI Score.

$$F1 = 2PR \ / \ P + R \tag{4}$$

4.4 | Accuracy (A)

Accuracy is the proportion of correct forecasts among all predictions. It is computed using Equation (5).

$$A = \left(T_p + T_n\right) \ / \ \left(F_p + F_n\right) \tag{5}$$

where

T_p—number of times proposed system accurately predicts the arrhythmia
T_n—number of times proposed system accurately predicts non-arrhythmia
F_p—number of times proposed system predicts non-arrhythmia as arrhythmia.
F_n—number of times proposed system predicts arrhythmia as non-arrhythmia.

20436394, 2024, 6, Downloaded from https://ietresearch.onlinelibrary.wiley.com/doi/10.1049/wss2.12085, Wiley Online Library on [11/03/2026]. See the Terms and Conditions (https://onlinelibrary.wiley.com/terms-and-conditions) on Wiley Online Library for rules of use; OA articles are governed by the applicable Creative Commons License

4.5 | Inference time

A DL model's inference time is the time it takes to process fresh data and make a prediction. The inference time is a metric for determining how long it takes for information to spread. The number of frames processed every second is calculated by dividing one by the inference time. Real-time applications necessitate quick inference times.

4.6 | Average network delay

The present load in terms of the number of concurrent requests and the network bandwidth is used to calculate the average network delay.

4.7 | Average Service time

The average service time is given by Formula (1)/(μ–λ), where μ is the number of requests processed per second and λ is the average rate at which the requests are arriving to be serviced.

It is typically necessary to compare how different risk detection techniques stack up concerning recall, precision, and classification accuracy to assess the efficacy of the technique. The proposed technique employed the HW to extract heart rate features and biological indicators and then applied it to a deep CNN. Experiments were carried out using four distinct models, namely k-Nearest Neighbours (KNN) [41], SVM [42, 43], Discrete Wavelet-based Convolutional Neural Network (DW-CNN) [44], and the proposed HW-based Convolutional Neural Network (HW-CNN). Recall, precision, F1 score, and accuracy are the performance parameters that were compared based on a review of 250 patient records. The detailed results are presented in Table 5.

The KNN classifier has satisfactory performance, with recall, precision, F1 score, and accuracy all exceeding 80%. The SVM algorithm exhibits a substantial enhancement compared to the KNN algorithm, with a performance of over 92% across all evaluation measures. The DW-CNN classifier demonstrates outstanding performance, surpassing 98% in all criteria. Utilising discrete wavelet transformation seems to improve the process of extracting features, resulting in enhanced classification performance. The HW-CNN technique outperforms other classifiers, exhibiting recall, precision, F1 score, and accuracy exceeding 99%. Integrating HW transformation with a deep CNN architecture showcases improved capabilities in extracting features and performing classification.

TABLE 5 Comparison of recall, precision, and accuracy of the employed HW-CNN data.

Classifier	Recall (%)	Precision (%)	FI score (%)	Accuracy (%)
KNN	86.8	87.4	87.1	87.4
SVM	92.2	92.4	92.2	92.2
DW-CNN	98.1	98.4	98.2	98.4
HW-CNN	99.1	99.3	99.1	99.3

Figure 7 shows the sensitivity analysis conducted on 100, 150, 200, and 250 patient records and it revealed notable differences in performance. Results indicated that the combination of HW and deep CNN (HW-CNN) based techniques outperformed other existing methods due to its well-trained data. Comparison with similar methods showed that the proposed approach achieved higher recall, precision, FI score, and accuracy values.

Trained models were employed in the inference process to make real-time predictions without additional preprocessing. In real-time inference design, the inference process can start at any time, and an instant response is necessary. This is used to assess both streaming and interactive data. Inference time increases as the number of features increases as seen in Figure 8, however, the increase is modest between 2.5% and 9%. The system was trained and tested on the MIT-BIH Ventricular arrhythmia database as well to demonstrate the adaptability of the suggested technique for the identification of different arrhythmias.

As seen in Figure 9, there is a predisposition of increasing accuracy as the number of characteristics increases. However, despite a linear rise in size until 11 no. of features for the used

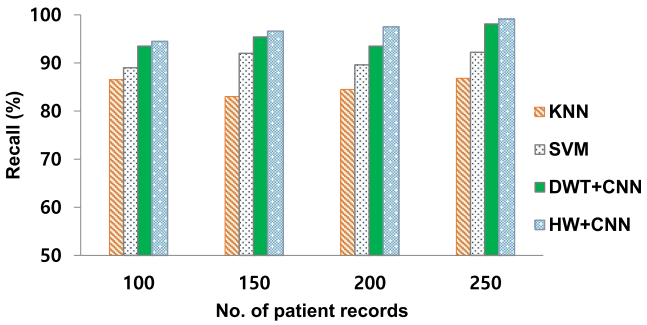

FIGURE 7 Comparison of Recall percentage.

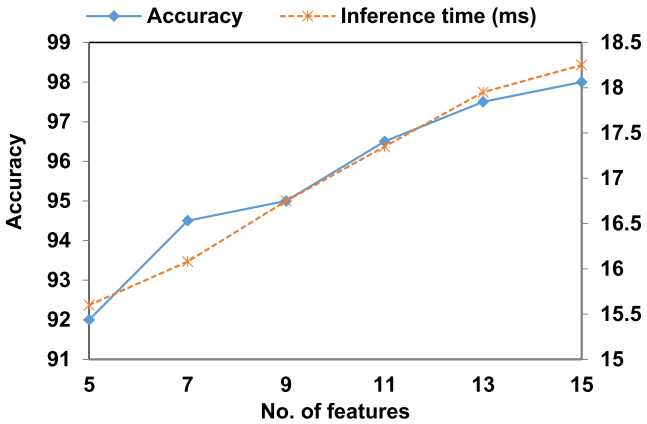

FIGURE 8 Accuracy versus inference time.

20436394, 2024, 6, Downloaded from https://ietresearch.onlinelibrary.wiley.com/doi/10.1049/wss2.12085, Wiley Online Library on [11/03/2026]. See the Terms and Conditions (https://onlinelibrary.wiley.com/terms-and-conditions) on Wiley Online Library for rules of use; OA articles are governed by the applicable Creative Commons License

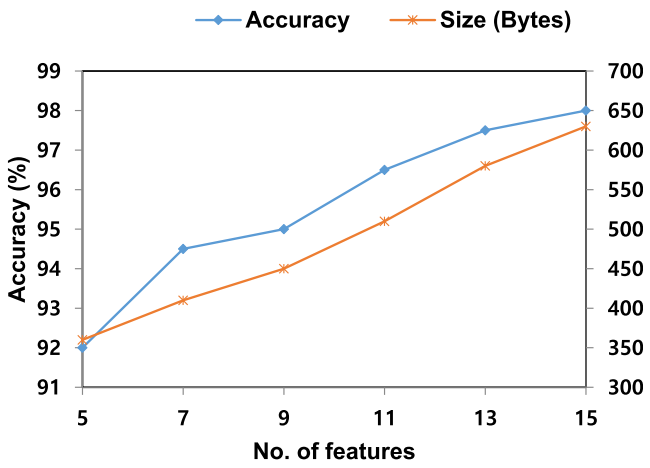

FIGURE 9 Accuracy versus size.

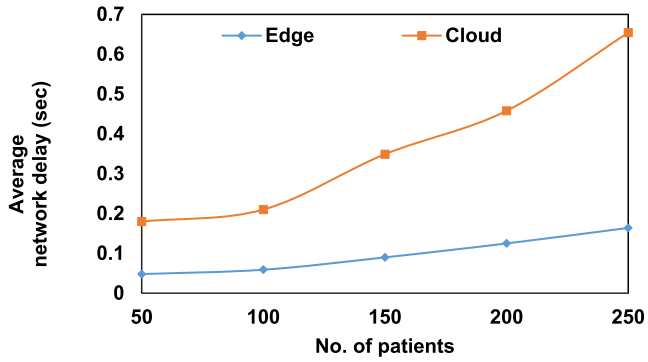

FIGURE 10 Average network delay for edge and fully cloud-based deployment.

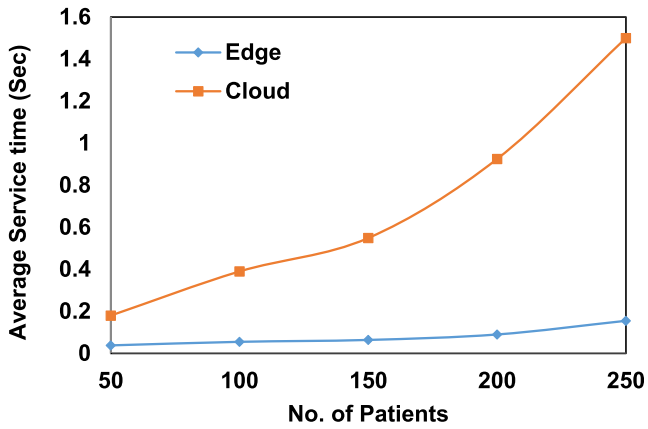

FIGURE 11 Average service time for edge and fully cloud-based deployment.

datasets, the improvement in accuracy slows down after 9 no. of features as seen in Figure 9. The model's size is expressed in bytes. 11 would be chosen as the best feature subset based on the trade-off between model performance and size. When the number of features used was increased from 5 to 9, the accuracy increased by 3% while the model size increased by 90 B; similarly, when the number of features used was increased from 9 to 15, the accuracy increased by 3% while the model size increased by 180 B.

The training process involved the selection of a Convolutional Neural Network with 11 layers and the use of 7000 records. In the framework of smart cardiac risk prediction, we developed two sets of simulation scenarios: (1) Cloud-based and (2) edge-based. These scenarios allowed us to examine the effects of different deployment tactics. The experiments evaluate the impact of different deployment options on the performance of the proposed system, specifically in terms of network delay and request processing time, using varied numbers of patients. In essence, a cloud-based AI solution was utilised, and the process of training the model was conducted on a cloud data centre utilising the provided dataset. Each of the 20 edge nodes in the edge node scenario is positioned in the same place as a base station. Every node possesses a limited quantity of computational capacity. Each node supports the Amazon m1.large and m1.xlarge instance types, but because to constrained physical resources, only a maximum of 10 instances can be launched on each node.

In the edge-based deployment as depicted in Figure 1, the trained model is entirely deployed on the edge nodes, and the cognitive algorithm is executed on the edge, whereas the cloud has only management functionality. Figure 10 shows the average network delay for both the core cloud and the edge-only system with varied patient counts. In comparison to a fully cloud-based deployment paradigm, the results reveal that delivering a service on the edge allows for significant network delay reduction. The client connects to an edge server through the first-hop router with a bandwidth of 54 Mbps. Edge delay is associated with the computational capability of the edge device and the intercommunication delay between the nodes in the edge network. Edge computing lowers latency and increases overall performance by processing data closer to the source and prioritising traffic.

The average response time for processing with the cloud and only with edge servers for varying system loads of many patients without bandwidth constraints is shown in Figure 11. When there is no limitation on the amount of data that may be transmitted, the delay in queueing becomes the dominant factor. When the volume of data being processed goes beyond 50% of the system's capacity, it exceeds the threshold of 0.05 s for an acceptable response time. Figure 11 assessed the service response time in seconds while evaluating the patient count, which ranged from 50 to 250 persons per minute. There is a correlation between the increase in the number of patients and the lengthening of the service response time. The edge-based technique yielded less service response time than the fully cloud-based prediction method. The response time is 16% faster for 200 patients than 150. The edge-based prediction provides excellent services with a notable decrease in reaction time compared to the cloud-based implementation. This is because the data is stored and expected to be close to the patient's environment.

20436394, 2024, 6, Downloaded from https://ietresearch.onlinelibrary.wiley.com/doi/10.1049/wss2.12085, Wiley Online Library on [11/03/2026]. See the Terms and Conditions (https://onlinelibrary.wiley.com/terms-and-conditions) on Wiley Online Library for rules of use; OA articles are governed by the applicable Creative Commons License

5 | CONCLUSION AND FUTURE WORK

Researchers have proposed a smarter way of predicting cardiac risk that involves placing the training process on the public cloud and the inference process on the edge device. The proposed cognitive algorithm learns and predicts cardiac risk by taking into account all relevant sensor data. The 11-layer CNN model was found to be the most suitable model for the dataset used in the experiment. The approach outperforms the traditional method in terms of accuracy, network delay, and service response time. Future research should focus on developing interpretable and explainable DL models for cardiac risk prediction.

In this work, an effective Deep CNN model was used to process a large amount of data. However, one of the challenges with this model is its lack of interpretability, which can hinder healthcare providers' trust and utilisation of these predictive models in clinical practice. Therefore, future research should focus on developing more interpretable and explainable DL models for cardiac risk prediction. To ensure that cardiac risk prediction models are reliable and effective, they need to be trained on diverse and representative datasets that encompass the variability and complexity of cardiac risk factors. In future, researchers should focus on creating predictive models that are widely applicable. We will use other advanced DL models like RNN and LSTM to improve accuracy and adaptability. The cognitive heart care approach will be bolstered in the future by federated learning which allows edge devices to collaborate on learning a shared prediction model while maintaining all training data on the device [6].

AUTHOR CONTRIBUTIONS

S. Durga: Conceptualization; methodology; resources; writing – original draft. **Esther Daniel**: Investigation; methodology; writing – original draft. **J. Andrew**: Formal analysis; supervision; validation; writing – review & editing. **Radhakrishna Bhat**: Validation; writing – review & editing.

ACKNOWLEDGEMENTS

This research received no specific grant from any funding agency in the public, commercial, or not-for-profit sectors.

CONFLICT OF INTEREST STATEMENT

All the authors of the manuscript have no conflict of interest to declare.

DATA AVAILABILITY STATEMENT

Data is available on request from the authors.

ORCID

J. Andrew https://orcid.org/0000-0003-3592-6543

REFERENCES

1. Heidari, A., et al.: A green, secure, and deep intelligent method for dynamic IoT-edge-cloud offloading scenarios. Sustainable Computing: Informatics and Systems 38, 100859 (2023). https://doi.org/10.1016/j.suscom.2023.100859
2. Durga, S., Daniel, E., Deepakanmani, S.: DNN-based decision support system for ECG abnormalities. In: 2nd EAI International Conference on Big Data Innovation for Sustainable Cognitive Computing: BDCC 2019, pp. 331–338. Springer International Publishing (2021)
3. Pal, S., et al.: A hybrid edge-cloud system for networking service components optimization using the internet of things. Electronics 12(3), 649 (2023). https://doi.org/10.3390/electronics12030649
4. Obied, A.: Different deep learning techniques in heart disease classification: survey. Journal of Al-Qadisiyah for computer science and mathematics 15(2), 63 (2023)
5. Xie, S., Yu, Z., Lv, Z.: Multi-disease prediction based on deep learning: a survey. Comput. Model. Eng. Sci. 128(2), 489–522 (2021)
6. Xu, J., et al.: Federated learning for healthcare informatics. Journal of healthcare informatics research 5, 1–19 (2021)
7. Krishnamoorthy, S., Dua, A., Gupta, S.: Role of emerging technologies in future IoT-driven Healthcare 4.0 technologies: a survey, current challenges and future directions. J. Ambient Intell. Hum. Comput. 14(1), 361–407 (2023)
8. Zwack, C.C., et al.: The evolution of digital health technologies in cardiovascular disease research. npj Digital Medicine 6(1), 1 (2023)
9. Nguyen, G.N., et al.: Secure blockchain enabled Cyber–physical systems in healthcare using deep belief network with ResNet model. J. Parallel Distr. Comput. 153, 150–160 (2021)
10. Anand, R., et al.: An enhanced ResNet-50 deep learning model for arrhythmia detection using electrocardiogram biomedical indicators. Evolving Systems 15(1), 83–97 (2024)
11. Chandra, A.C., et al.: Classification of myocardial infarction from multi-lead ECG signals using hybrid deep learning. In: 2023 IEEE International Conference on Distributed Computing, VLSI, Electrical Circuits and Robotics (DISCOVER), pp. 225–231. IEEE (2023)
12. Anil, B.C., et al.: Efficient local cloud-based solution for liver cancer detection using deep learning. Int. J. Cloud Appl. Comput. (IJCAC) 12(1), 1–13 (2022)
13. Zhang, H., et al.: Atrial fibrillation classification based on the 2D representation of minimal subset ECG and a non-deep neural network. Front. Physiol. 14, 1070621 (2023)
14. Radhika, K., Oruganti, V.R.M.: Cross domain features for subject-independent stress detection. In: 2022 IEEE Region 10 Symposium (TENSYMP), pp. 1–6. IEEE (2022)
15. Farahani, B., Firouzi, F., Chakrabarty, K.: Healthcare iot. In: Intelligent Internet of Things: From Device to Fog and Cloud, pp. 515–545 (2020)
16. Cañón-Clavijo, R.E., et al.: IoT based system for heart monitoring and arrhythmia detection using machine learning. Journal of Healthcare Engineering 2023(1), 6401673 (2023)
17. Srinivasulu, A., Sriraam, N., Prakash, V.S.: A signal processing framework for the detection of abnormal cardiac episodes. Cardiovascular Engineering and Technology 14(2), 331–349 (2023)
18. Khan, M.M.R., et al.: Electrocardiogram heartbeat classification using convolutional neural networks for the detection of cardiac Arrhythmia. In: 2020 Fourth International Conference on I-SMAC (IoT in Social, Mobile, Analytics and Cloud)(I-SMAC), pp. 915–920. IEEE (2020)
19. Sree Ranjani, R.: Machine learning applications for a real-time monitoring of arrhythmia patients using IoT. Internet of Things for Healthcare Technologies, 93–107 (2021)
20. Durga, S., Daniel, E., Leelipushpam, P.G.J.: A novel request state aware resource provisioning and intelligent resource capacity prediction in hybrid mobile cloud. J. Ambient Intell. Hum. Comput., 1–14 (2022)
21. Machacha, L., Bhattacharya, P.: Cancer classification from DNA microarray using genetic algorithms and case-based reasoning. In: Research Anthology on Bioinformatics, Genomics, and Computational Biology, pp. 378–399. IGI Global (2024)
22. Pati, A., et al.: An IoT-fog-cloud integrated framework for real-time remote cardiovascular disease diagnosis. Informatics 10(1), 21. MDPI (2023)
23. Islam, M.M., Rahaman, A., Islam, M.R.: Development of smart healthcare monitoring system in IoT environment. SN computer science 1, 1–11 (2020)

20436394, 2024, 6, Downloaded from https://ietresearch.onlinelibrary.wiley.com/doi/10.1049/wss2.12085, Wiley Online Library on [11/03/2026]. See the Terms and Conditions (https://onlinelibrary.wiley.com/terms-and-conditions) on Wiley Online Library for rules of use; OA articles are governed by the applicable Creative Commons License

24. Khan, M.A.: An IoT framework for heart disease prediction based on MDCNN classifier. IEEE Access 8, 34717–34727 (2020)
25. Abirami, S., Chitra, P.: Energy-efficient edge based real-time healthcare support system. Advances in Computers 117(1), 339–368. Elsevier (2020)
26. Raju, K.B., et al.: [Retracted] smart heart disease prediction system with IoT and fog computing sectors enabled by cascaded deep learning model. Comput. Intell. Neurosci. 2022(1), 1070697 (2022)
27. Liu, M., et al.: Real time arrhythmia monitoring and classification based on edge computing and dnn. Wireless Commun. Mobile Comput. 2021(1), 5563338 (2021)
28. Yashudas, A., et al.: DEEP-CARDIO: recommendation system for cardiovascular disease prediction using IOT network. IEEE Sensor. J. (2024)
29. Singh, S., Singh, A., Limkar, S.: Prediction of heart disease using deep learning and internet of medical things. International Journal of Intelligent Systems and Applications in Engineering 12(1s), 512–525 (2024)
30. Ketu, S., Mishra, P.K.: An intelligent hybrid classification model for heart disease detection using imbalanced electrocardiogram signals. J. Supercomput. 80(3), 4286–4308 (2024)
31. Mishra, J., & Tiwari, M.: IoT-enabled ECG-based heart disease prediction using three-layer deep learning and meta-heuristic approach. Signal, Image and Video Processing 18(1), 361–367 (2024)
32. Basavaraddi, S.S., & Raju, A.S.: Employing cloud-integrated neural network for prediction of heart disease using advanced telemedicine solutions. In: 2024 IEEE International Conference on Computing, Power and Communication Technologies (IC2PCT), vol. 5, pp. 1268–1273. IEEE (2024)
33. Durga, S., et al.: Cardiac arrhythmia classification using sequential feature selection and decision tree classifier method. Int. J. Innovat. Comput. Appl. 12(4), 175–182 (2021)
34. Zyout, A.A., et al.: Advanced time-frequency methods for ecg waves recognition. Diagnostics 13(2), 308 (2023)
35. Bolhasani, H., Mohseni, M., Rahmani, A.M.: Deep learning applications for IoT in health care: a systematic review. Inform. Med. Unlocked 23, 100550 (2021)
36. https://www.kaggle.com/shayanfazeli/heartbeat
37. Liu, Z., et al.: Diagnosis of arrhythmias with few abnormal ECG samples using metric-based meta learning. Comput. Biol. Med. 153, 106465 (2023)
38. Moghadas, E., Rezazadeh, J., Farahbakhsh, R.: An IoT patient monitoring based on fog computing and data mining: cardiac arrhythmia usecase. Internet of Things 11, 100251 (2020)
39. Jang, J.H., Kim, T.Y., Yoon, D.: Effectiveness of transfer learning for deep learning-based electrocardiogram analysis. Healthcare informatics research 27(1), 19 (2021)
40. Weimann, K., Conrad, T.O.: Transfer learning for ECG classification. Sci. Rep. 11(1), 5251 (2021)
41. Ramasamy, K., Balakrishnan, K., Velusamy, D.: Detection of cardiac arrhythmias from ECG signals using FBSE and Jaya optimized ensemble random subspace K-nearest neighbor algorithm. Biomed. Signal Process Control 76, 103654 (2022)
42. Sanamdikar, S.T., Hamde, S.T., Asutkar, V.G.: Classification and analysis of cardiac arrhythmia based on incremental support vector regression on IOT platform. Biomed. Signal Process Control 64, 102324 (2021)
43. Subramanian, K., Prakash, N.K.: Machine learning based cardiac arrhythmia detection from ECG signal. In: 2020 Third International Conference on Smart Systems and Inventive Technology (ICSSIT), pp. 1137–1141. IEEE (2020)
44. Lavanya, R., et al.: Wearable sensor-based edge computing framework for cardiac arrhythmia detection and acute stroke prediction. J. Sens. 2023(1), 3082870 (2023)
45. Ma, S., et al.: An effective data enhancement method for classification of ECG arrhythmia. Measurement 203, 111978 (2022)

How to cite this article: Durga, S., et al.: SmartCardio: advancing cardiac risk prediction through Internet of Things and edge cloud intelligence. IET Wirel. Sens. Syst. 14(6), 348–362 (2024). https://doi.org/10.1049/wss2.12085

20436394, 2024, 6, Downloaded from https://ietresearch.onlinelibrary.wiley.com/doi/10.1049/wss2.12085, Wiley Online Library on [11/03/2026]. See the Terms and Conditions (https://onlinelibrary.wiley.com/terms-and-conditions) on Wiley Online Library for rules of use; OA articles are governed by the applicable Creative Commons License